BN-DG-J5

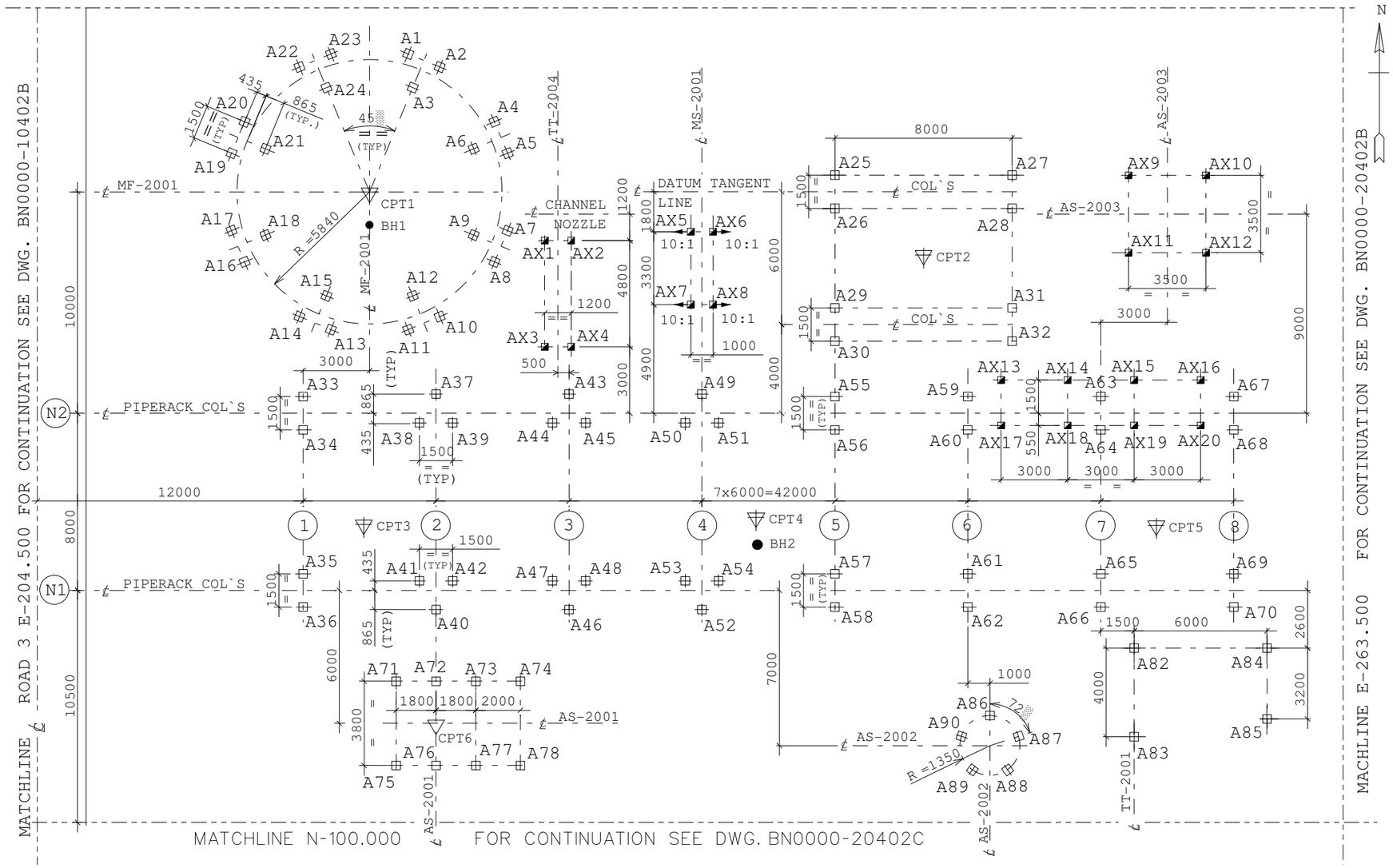

GENERAL NOTES

1. DIMENSIONS IN mm.
2. COORDINATES AND ELEVATIONS IN m.
3. COORDINATES REFER TO THE PLANT GRID SYSTEM.
4. ELEVATIONS REFER TO PLANT DATUM 0.000 WHICH IS EQUAL TO 3.200 +N.A.P.
5. SETTING OUT DIMENSIONS FOR RAKED PILES ARE GIVEN AT CUT-OFF ELEVATION.

LEGEND

A	PILE 380 ϕ, WORKING LOAD 600 kN
AX	PILE 290 ϕ, WORKING LOAD 300 kN
10:1	RAKED PILES
CPT	DUTCH CONE PENETRATION TEST
BH	BORE HOLE

REFERENCE DRAWINGS

SPECIFICATION FOR THE INSTALLATION OF PRECAST REINFORCED CONCRETE PILES	BN0000-SP-JL1
PILE DETAILS	BN0000-00402A
LAYOUT OF BORE HOLES AND DUTCH CONE PENETRATION TESTS	BN0000-00401A
OVERALL PLOTPLAN	BN0000-00101A
UNIT PLOTPLAN	BN0000-00201A

KEYPLAN

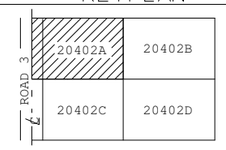

DRAUGHTING INSTRUCTIONS

1. Usual scale 1:100.
2. North direction, matchlines and battery limits shall, if possible, be the same as those on the plotplan.
3. Locating dimensions shall, if practical, be the same a those used on the plotplan.
4. Pile numbering system to be chosen such that all pile numbers are unique for the whole job.
5. Pile numbers which have been used once on an issued drawing, and are cancelled, shall not be re-used

Iss	Date	By	Description of issue	Ch'k'd	App'd
			COMPLETELY REDRAWN		

PILE TYPE : ◪ 300 kN PILE, 290 ϕ

PILE NO.	NO. OF PILES 10m	NO. OF PILES 12m	CUT-OFF EL.	TIP EL.	MAX. PILE LOADS VERT.	MAX. PILE LOADS UPLIFT	MAX. PILE LOADS HOR.	REMARKS
AX1 - AX4								
AX5- AX8								SETTING OUT DIMS AT -1.200 (GEN. NOTE 5)
AX9- AX12								
AX13-AX20								
TOTAL								

PILE TYPE : ⊞ 600 kN PILE, 380 ϕ

PILE NO.	NO. OF PILES 10m	NO. OF PILES 12m	CUT-OFF EL.	TIP EL.	MAX. PILE LOADS VERT.	MAX. PILE LOADS UPLIFT	MAX. PILE LOADS HOR.	REMARKS
A1 -A24								
A25-A32								
A33-A36								
A37-A54								
A55-A70								
A71-A78								
A79-A81								CANCELLED
A82-A85								
A86-A90								
TOTAL								

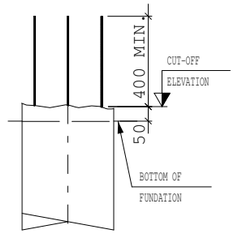

REINFORCEMENT TO PROJECT MIN. 400 mm ABOVE CUT-OFF ELEVATION

DETAIL OF PILE HEAD

PILING PLAN
EXAMPLE DRAWING

This drawing is not to be used for construction or for ordering material unless dated and signed

Certified

Date

Scale 1:100

Approvals

Design	Eng'r		

BN-DG-J5

Issue 2

A3

0 1 2 3 4 5 6 7 8 9 10 11 12 13 14 15 16 17 18 19 20